ISSN 2518-1726 (Online),
ISSN 1991-346X (Print)

ҚАЗАҚСТАН РЕСПУБЛИКАСЫ
ҰЛТТЫҚ ҒЫЛЫМ АКАДЕМИЯСЫНЫҢ
Әл-Фараби атындағы Қазақ ұлттық университетінің

Х А Б А Р Л А Р Ы

ИЗВЕСТИЯ

НАЦИОНАЛЬНОЙ АКАДЕМИИ НАУК
РЕСПУБЛИКИ КАЗАХСТАН
Казахский национальный университет
имени Аль-Фараби

N E W S

OF THE ACADEMY OF SCIENCES
OF THE REPUBLIC OF KAZAKHSTAN
Al-Farabi Kazakh
National University

SERIES
PHYSICO-MATHEMATICAL

3 (337)

MAY – JUNE 2021

PUBLISHED SINCE JANUARY 1963

PUBLISHED 6 TIMES A YEAR

ALMATY, NAS RK

NAS RK is pleased to announce that News of NAS RK. Series physico-mathematical journal has been accepted for indexing in the Emerging Sources Citation Index, a new edition of Web of Science. Content in this index is under consideration by Clarivate Analytics to be accepted in the Science Citation Index Expanded, the Social Sciences Citation Index, and the Arts & Humanities Citation Index. The quality and depth of content Web of Science offers to researchers, authors, publishers, and institutions sets it apart from other research databases. The inclusion of News of NAS RK. Series of chemistry and technologies in the Emerging Sources Citation Index demonstrates our dedication to providing the most relevant and influential content of chemical sciences to our community.

Қазақстан Республикасы Ұлттық ғылым академиясы «ҚР ҰҒА Хабарлары. Физикалық-математикалық сериясы» ғылыми журналының Web of Science-тің жаңаланған нусқасы Emerging Sources Citation Index-те индекстелуге қабылданганын хабарлайды. Бұл индекстелу барысында Clarivate Analytics компаниясы журналды одан әрі the Science Citation Index Expanded, the Social Sciences Citation Index және the Arts & Humanities Citation Index-ке қабылдау мәселесін қарастыруда. Webof Science зерттеушілер, авторлар, баспашылар мен мекемелерге контент тереңдігі мен сапасын усынады. ҚР ҰҒА Хабарлары. Химия және технология сериясы Emerging Sources Citation Index-ке енуі біздің қоғамдастық үшін ең өзекті және беделді химиялық ғылымдар бойынша контентке адалдыгымызды білдіреді.

НАН РК сообщает, что научный журнал «Известия НАН РК. Серия физико-математическая» был принят для индексирования в Emerging Sources Citation Index, обновленной версии Web of Science. Содержание в этом индексировании находится в стадии рассмотрения компанией Clarivate Analytics для дальнейшего принятия журнала в the Science Citation Index Expanded, the Social Sciences Citation Index и the Arts & Humanities Citation Index. Web of Science предлагает качество и глубину контента для исследователей, авторов, издателей и учреждений. Вклю-чение Известия НАН РК в Emerging Sources Citation Index демонстрирует нашу приверженность к наиболее актуальному и влиятельному контенту по химическим наукам для нашего сообщества.

Бас редактор:

МҰТАНОВ Ғалымқайыр Мұтанұлы, техника ғылымдарының докторы, профессор, ҚР ҰҒА академигі, ҚР БҒМ ҒК «Ақпараттық және есептеу технологиялары институты» бас директорының м.а. (Алматы, Қазақстан) Н-5

Редакция алқасы:

ҚАЛИМОЛДАЕВ Мақсат Нұрәділұлы (бас редактордың орынбасары), физика-математика ғылымдарының докторы, профессор, ҚР ҰҒА академигі, ҚР БҒМ ҒК «Ақпараттық және есептеу технологиялары институты» бас директорының кеңесшісі, зертхана меңгерушісі (Алматы, Қазақстан) Н-7

БАЙГУНЧЕКОВ Жұмаділ Жаңабайұлы (бас редактордың орынбасары), техника ғылымдарының докторы, профессор, ҚР ҰҒА академигі, Кибернетика және ақпараттық технологиялар институты, Сатпаев университетінің Қолданбалы механика және инженерлік графика кафедрасы, (Алматы, Қазақстан) Н-3

ВОЙЧИК Вальдемар, техника ғылымдарының докторы (физика), Люблин технологиялық университетінің профессоры (Люблин, Польша) Н=23

БОШКАЕВ Қуантай Авғазыұлы, Ph.D. Теориялық және ядролық физика кафедрасының доценті, әл-Фараби атындағы Қазақ ұлттық университеті (Алматы, Қазақстан) Н-10

QUEVEDO Hemando, профессор, Ядролық ғылымдар институты (Мехико, Мексика) Н-28

ЖҮСІПОВ Марат Абжанұлы, физика-математика ғылымдарының докторы, теориялық және ядролық физика кафедрасының профессоры, әл-Фараби атындағы Қазақ ұлттық университеті (Алматы, Қазақстан) Н-7

КОВАЛЕВ Александр Михайлович, физика-математика ғылымдарының докторы, Украина ҰҒА академигі, Қолданбалы математика және механика институты (Донецк, Украина) Н-5

МИХАЛЕВИЧ Александр Александрович, техника ғылымдарының докторы, профессор, Беларусь ҰҒА академигі (Минск, Беларусь) Н-2

РАМАЗАНОВ Тілекқабыл Сәбитұлы, физика-математика ғылымдарының докторы, профессор, ҚР ҰҒА академигі, әл-Фараби атындағы Қазақ ұлттық университетінің ғылыми-инновациялық қызмет жөніндегі проректоры, (Алматы, Қазақстан) Н-26

ТАКИБАЕВ Нұрғали Жабағаұлы, физика-математика ғылымдарының докторы, профессор, ҚР ҰҒА академигі, әл-Фараби атындағы Қазақ ұлттық университеті (Алматы, Қазақстан) Н-5

ТИГИНЯНУ Ион Михайлович, физика-математика ғылымдарының докторы, академик, Молдова Ғылым Академиясының президенті, Молдова техникалық университеті (Кишинев, Молдова) Н-42

ХАРИН Станислав Николаевич, физика-математика ғылымдарының докторы, профессор, ҚР ҰҒА академигі, Қазақстан-Британ техникалық университеті (Алматы, Қазақстан) Н-10

ДАВЛЕТОВ Асқар Ербуланович, физика-математика ғылымдарының докторы, профессор, әл-Фараби атындағы Қазақ ұлттық университеті (Алматы, Қазақстан) Н – 12

КАЛАНДРА Пьетро, Ph.D (физика), Наноқұрылымды материалдарды зерттеу институтының профессоры (Рим, Италия) Н = 26

«ҚР ҰҒА Хабарлары. Физика-математикалық сериясы».
ISSN 2518-1726 (Online),
ISSN 2224-346X (Print)

Меншіктенуші: «Қазақстан Республикасының Ұлттық ғылым академиясы» РҚБ (Алматы қ.).
Қазақстан Республикасының Ақпарат және қоғамдық даму министрлігінің Ақпарат комитетінде 14.02.2018 ж. берілген **№ 16906-Ж** мерзімдік басылым тіркеуіне қойылу туралы куәлік.

Тақырыптық бағыты: *физика-математика ғылымдары және ақпараттық техникалар саласындағы басым ғылыми зерттеулерді жариялау.*
Мерзімділігі: жылына 6 рет.

Тиражы: 300
Редакцияның мекен-жайы: 050010, Алматы қ., Шевченко көш., 28, 219 бөл., тел.: 272-13-19, 272-13-18
http://www.physico-mathematical.kz/index.php/en/

© Қазақстан Республикасының Ұлттық ғылым академиясы, 2021

Типографияның мекен-жайы: «Аруна» ЖК, Алматы қ., Муратбаева көш., 75.

Главный редактор:

МУТАНОВ Галимкаир Мутанович, доктор технических наук, профессор, академик НАН РК, и.о. генерального директора «Института информационных и вычислительных технологий» КН МОН РК (Алматы, Казахстан) Н - 5

Редакционная коллегия:

КАЛИМОЛДАЕВ Максат Нурадилович, (заместитель главного редактора), доктор физико-математических наук, профессор, академик НАН РК, советник генерального директора «Института информационных и вычислительных технологий» КН МОН РК, заведующий лабораторией (Алматы, Казахстан) Н - 7

БАЙГУНЧЕКОВ Жумадил Жанабаевич, (заместитель главного редактора), доктор технических наук, профессор, академик НАН РК, Институт кибернетики и информационных технологий, кафедра прикладной механики и инженерной графики, университет Сатпаева (Алматы, Казахстан) Н - 3

ВОЙЧИК Вальдемар, доктор технических наук (физ.-мат.), профессор Люблинского технологического университета (Люблин, Польша) Н=23

БОШКАЕВ Куантай Авгазыевич, доктор Ph.D, преподаватель, доцент кафедры теоретической и ядерной физики, Казахский национальный университет им. аль-Фараби (Алматы, Казахстан) Н - 10

QUEVEDO Hemando, профессор, Национальный автономный университет Мексики (UNAM), Институт ядерных наук (Мехико, Мексика) Н - 28

ЖУСУПОВ Марат Абжанович, доктор физико-математических наук, профессор кафедры теоретической и ядерной физики, Казахский национальный университет им. аль-Фараби (Алматы, Казахстан) Н - 7

КОВАЛЕВ Александр Михайлович, доктор физико-математических наук, академик НАН Украины, Институт прикладной математики и механики (Донецк, Украина) Н - 5

МИХАЛЕВИЧ Александр Александрович, доктор технических наук, профессор, академик НАН Беларуси (Минск, Беларусь) Н - 2

РАМАЗАНОВ Тлеккабул Сабитович, доктор физико-математических наук, профессор, академик НАН РК, проректор по научно-инновационной деятельности, Казахский национальный университет им. аль-Фараби (Алматы, Казахстан) Н – 26

ТАКИБАЕВ Нургали Жабагаевич, доктор физико-математических наук, профессор, академик НАН РК, Казахский национальный университет им. аль-Фараби (Алматы, Казахстан) Н - 5

ТИГИНЯНУ Ион Михайлович, доктор физико-математических наук, академик, президент Академии наук Молдовы, Технический университет Молдовы (Кишинев, Молдова) Н - 42

ХАРИН Станислав Николаевич, доктор физико-математических наук, профессор, академик НАН РК, Казахстанско-Британский технический университет (Алматы, Казахстан) Н – 10

ДАВЛЕТОВ Аскар Ербуланович, доктор физико-математических наук, профессор, Казахский национальный университет им. аль-Фараби (Алматы, Казахстан) Н – 12

КАЛАНДРА Пьетро, доктор философии (Ph.D, физика), профессор Института по изучению наноструктурированных материалов (Рим, Италия) Н = 26

«Известия НАН РК. Серия физика-математическая».
ISSN 2518-1726 (Online),
ISSN 2224-346X (Print)

Собственник: Республиканское общественное объединение «Национальная академия наук Республики Казахстан» (г. Алматы).

Свидетельство о постановке на учет периодического печатного издания в Комитете информации Министерства информации и общественного развития Республики Казахстан **№ 16906-Ж** выданное 14.02.2018 г.

Тематическая направленность: *публикация статей по геологии и техническим наукам.*

Периодичность: 6 раз в год.

Тираж: 300

Адрес редакции: 050010, г. Алматы, ул. Шевченко, 28, оф. 219, тел.: 272-13-19, 272-13-18

http://www.physico-mathematical.kz/index.php/en/

© Национальная академия наук Республики Казахстан, 2021

Адрес типографии: ИП «Аруна», г. Алматы, ул. Муратбаева, 75.

Editor in chief

MUTANOV Galimkair Mutanovich, doctor of technical Sciences, Professor, Academician of NAS RK, acting director of the Institute of Information and Computing Technologies of SC MES RK (Almaty, Kazakhstan) H - 5

Editorial board:

KALIMOLDAYEV Maksat Nuradilovich (Deputy Editor-in-Chief), doctor in Physics and Mathematics, Professor, Academician of NAS RK, Advisor to the General Director of the Institute of Information and Computing Technologies of SC MES RK, Head of the Laboratory (Almaty, Kazakhstan) H - 7

BAYGUNCHEKOV Zhumadil Zhanabayevich, (Deputy Editor-in-Chief), doctor of Technical Sciences, Professor, Academician of NAS RK, Institute of Cybernetics and Information Technologies, Department of Applied Mechanics and Engineering Graphics, Satbayev University (Almaty, Kazakhstan) H - 3

WOICIK Waldemar, Doctor of Phys.-Math. Sciences, Professor, Lublin University of Technology (Lublin, Poland) H=23

BOSHKAYEV Kuantai Avgazievich, PhD, Lecturer, Associate Professor of the Department of Theoretical and Nuclear Physics, Al-Farabi Kazakh National University (Almaty, Kazakhstan) H - 10

QUEVEDO Hemando, Professor, National Autonomous University of Mexico (UNAM), Institute of Nuclear Sciences (Mexico City, Mexico) H - 28

ZHUSSUPOV Marat Abzhanovich, Doctor in Physics and Mathematics, Professor of the Department of Theoretical and Nuclear Physics, al-Farabi Kazakh National University (Almaty, Kazakhstan) H - 7

KOVALEV Alexander Mikhailovich, Doctor in Physics and Mathematics, Academician of NAS of Ukraine, Director of the State Institution «Institute of Applied Mathematics and Mechanics» DPR (Donetsk, Ukraine) H - 5

MIKHALEVICH Alexander Alexandrovich, Doctor of Technical Sciences, Professor, Academician of NAS of Belarus (Minsk, Belarus) H - 2

RAMAZANOV Tlekkabul Sabitovich, Doctor in Physics and Mathematics, Professor, Academician of NAS RK, Vice-Rector for Scientific and Innovative Activity, al-Farabi Kazakh National University (Almaty, Kazakhstan) H – 26

TAKIBAYEV Nurgali Zhabagaevich, Doctor in Physics and Mathematics, Professor, Academician of NAS RK, al-Farabi Kazakh National University (Almaty, Kazakhstan) H - 5

TIGHINEANU Ion Mikhailovich, Doctor in Physics and Mathematics, Academician, Full Member of the Academy of Sciences of Moldova, President of the AS of Moldova, Technical University of Moldova (Chisinau, Moldova) H - 42

KHARIN Stanislav Nikolayevich, Doctor in Physics and Mathematics, Professor, Academician of NAS RK, Kazakh-British Technical University (Almaty, Kazakhstan) H – 10

DAVLETOV Askar Erbulanovich, Doctor in Physics and Mathematics, Professor, al-Farabi Kazakh National University (Almaty, Kazakhstan) H - 12

CALANDRA Pietro, PhD in Physics, Professor at the Institute of Nanostructured Materials (Monterotondo Station Rome, Italy)

News of the National Academy of Sciences of the Republic of Kazakhstan.
Physical-mathematical series.
ISSN 2518-1726 (Online),
ISSN 2224-346X (Print)

Owner: RPA «National Academy of Sciences of the Republic of Kazakhstan» (Almaty).

The certificate of registration of a periodical printed publication in the Committee of information of the Ministry of Information and Social Development of the Republic of Kazakhstan **No. 16906-Ж,** issued 14.02.2018

Thematic scope: *publication of papers on geology and technical sciences.*

Periodicity: 6 times a year.

Circulation: 300

Editorial address: 28, Shevchenko str., of. 219, Almaty, 050010, tel. 272-13-19, 272-13-18,
http://www.physico-mathematical.kz/index.php/en/

© National Academy of Sciences of the Republic of Kazakhstan, 2021

Address of printing house: ST «Aruna», 75, Muratbayev str, Almaty.

NEWS
OF THENATIONAL ACADEMY OF SCIENCES OF THE REPUBLIC OF KAZAKHSTAN
PHYSICO-MATHEMATICAL SERIES
ISSN 1991-346X
Volume 3, Number 331 (2021), 128 – 137 **https://doi.org/10.32014/2020.2518-1726.55**

UDC 519.6
IRSTI 27.41.19

A. Temirbekov[1], Y. Malgazhdarov [2], A. Tleulessova[1], L.Temirbekova[3]
[1]Al-Farabi Kazakh National University, Almaty, Kazakhstan
[2]Sarsen Amanzholov East Kazakhstan State University, Ust-Kamenogorsk, Kazakhstan
[3]Abai Kazakh National Pedagogical University, Almaty, Kazakhstan
E-mail: temirbekov@kaznu.kz

FICTITIOUS DOMAIN METHOD FOR THE NAVIER-STOKES EQUATIONS

Abstract. The paper is devoted to the study and mathematical justification of the fictitious domain method for the Navier-Stokes equations. The method of fictitious domain with continuation by the lowest coefficients for the Navier-Stokes equations is substantiated in the work. The theorem of unambiguous solvability of the initial boundary value problem and the existence and uniqueness of the generalized solution of the auxiliary problem for the Navier-Stokes equations in the case of two spatial variables is proved. A numerical implementation of the proposed method of fictitious domain with continuation by the lowest coefficients for the Navier-Stokes equations is carried out. Various graphical illustrations of the results of numerical simulation using the fictitious domain method for the Navier-Stokes equations are presented.

Keywords: Fictitious domain method, Navier-Stokes equation, solvability of the initial boundary value problem, existence and uniqueness of the generalized solution, numerical calculations.

Introduction. Now the development of high-performance computing has made it possible to solve a complex physical problem of continuous media which are of great practical importance. Numerical simulation of flow of fluid in curved boundaries was carried out in most of the work based on the model of a viscous incompressible fluid. Algorithms using the finite-difference scheme for the Navier-Stokes equation are widely used. For numerical modeling of multidimensional problems of the mathematical physics in complex domains are needed an effective, universal computational algorithms. One of universal, effective computational algorithms is a fictitious domain method.

There are now several methods for the numerical solution of a boundary-value problems in complex geometric domains such as the method of curvilinear grid and the fictitious domain method. Using the curvilinear grid method requires converting the equation to curved coordinates which is more complex than the original equations. Also, the diverse requirements imposed on difference finite-difference grids make constructing curvilinear grids a complex mathematical problem.

The method of fictitious domain is easy to use and easily implemented on a computer. However, its disadvantage is in the loss of accuracy due to the presence of a small parameter in the auxiliary equations which will lead to poor conditionality of the system of difference equations. Originally the fictitious domain method was proposed in the works of Saulyev V.K. [1-2], Rikvind V.Ya. [3]. Justification of the fictitious domain method for a nonlinear model of hydrodynamics is considered in [4-7]. The paper [8] is devoted to the construction, research, and application of the augmented domain method for the approximate solution of mathematical physics problems in irregular domains. A distinctive feature and advantage of the augmented domain method is the absence of a small parameter in the auxiliary problem that affects the numerical implementation of the equations. The main idea of the method is that the original irregular domain Ω is replaced by another, simpler region Q such that $\Omega \subset Q$ in this new domain, the original differential

problem is replaced by a certain variational problem with a bounded operator. The equivalence of these problems is proved and a method for minimizing the resulting functional is proposed.

In [9-10], we consider a variant of the method of fictitious domain associated with the modification of nonlinear terms in a fictitious subdomain. The model problem shows the effectiveness of using such a modification. The proposed version of the method is used to solve the problem of an arbitrary domain and to set a boundary condition for the pressure. In [11], the method of fictitious domains with continuation by lowest coefficients for the model of the boundary layer of the atmosphere is mathematically justified. This model describes the distribution of pollutants in the atmosphere. To account for the terrain that affects the distribution of pollutants in the atmosphere, the method of fictitious domains is used. In [12], an approximate method based on the fictitious domain method is proposed for solving the two – dimensional Navier-Stokes equations in irregular domains. A computational finite – difference algorithm for solving the auxiliary problem of the fictitious domain method is developed. The results of numerical simulation of two-dimensional Navier-Stokes equations by the method of fictitious domain with continuation by the lowest coefficient are presented. For this task, a parallel algorithm was developed using the CUDA architecture, which was tested on different grid dimensions. In [13-14], an original computational method was developed for the numerical solution of an elliptic equation with strongly varying coefficients. Equations of this type are obtained at the second stage when solving the Navier-Stokes equation and the boundary layer of the atmosphere in regions of complex form by the method of fictitious domain. The proposed method is based on a special variable substitution that leads a problem with discontinuous coefficients of the second kind to a problem with discontinuous coefficients of the first kind. An iterative process with two parameters and considering the ratio of the coefficients of the equation in the subdomains is constructed. A theorem is proved for estimating the convergence rate of the developed iterative process. A computational algorithm is developed, and numerical calculations are performed to illustrate the effectiveness of the proposed method. In [15-16], we consider a family of domain separation methods based on the explicit use of the Lagrange multiplier defined on the actual boundary. The technique proposed by the author associated with genuine boundary conditions is common for modeling inviscid incompressible flows. In this method, the set differential problem sets the optimal control problem with a saddle point, and for the numerical implementation, the iterative conjugate gradient method is used.

Statement of the problem. In this part, let us consider the justification of the fictitious domain method for the Navier-Stokes equations with continuation by the lowest coefficients. In the domain $Q_T^0 = \Omega_0 \times (0,T)$, $S_T^0 = S^0 \times (0,T)$, we consider the initial boundary value problem for the Navier-Stokes equations:

$$\begin{cases} \dfrac{\partial \vec{v}}{\partial t} + \vartheta_i \vec{v}_{x_i} + \nabla p = \mu \Delta \vec{v} + f(x,t) \\ div\vec{v} = 0 \end{cases} \tag{1}$$

$$\vec{v}\Big|_{t=0} = a(x), \ \ \vec{v}\Big|_{S_T^0} = 0 \tag{2}$$

Ω_0 is defined as follows:

$$\Omega_0 = \{(x_1, x_2, x_3), 0 \le x_1 \le X, 0 \le x_2 \le Y, \delta(x_1, x_2) \le x_3 \le Z\} \tag{3}$$

In the work of Ladyzhenskaya O. A. [17], a review is made to justify the initial boundary value problem of the form (1), (2). The unique solvability of the boundary value problem of the form (1)-(2) with two spatial variables is proved. The problem (1)-(2) will be solved by the method of splitting by physical parameters, using the fictitious domain method with continuation by lowest coefficients to account the internal subdomain.

Let us add the domain Ω_0 to the rectangular parallelepiped $\Omega = \Omega_0 \cup \Omega_1$ and consider the following auxiliary problem in $Q_T = \Omega \times (0,T)$:

$$\frac{\partial v^{\varepsilon}}{\partial t} + \vartheta_i^{\varepsilon} \vec{v}_{x_i}^{\varepsilon} + \nabla p^{\varepsilon} = \mu \Delta \vec{v}^{\varepsilon} - \frac{\xi(x)}{\varepsilon} \cdot \vec{v}^{\varepsilon} + f^{\varepsilon}(x,t), \tag{4}$$

$$div \vec{v}^{\varepsilon} = 0,$$

where

$$\xi(\vec{x}) = \begin{cases} 1, \ \vec{x} \in \Omega_1, \\ 0, \ \vec{x} \in \Omega_0, \end{cases} \quad f^{\varepsilon}(x,t) = \begin{cases} f(\vec{x},t), \ (\vec{x},t) \in Q_T^{\circ} \\ 0, (x,t) \in Q_T / Q_T^{\circ} \end{cases} \tag{5}$$

Here, the complement of the main domain of Ω_0 to the rectangular parallelepiped Ω is denoted by Ω_1 The boundary of the domain Ω_0 at $x_3 = \delta(x_1, x_2)$ has become the interface between the sub-domains Ω_0, Ω_1 and the following matching conditions must be met on it:

$$\left[\vec{v}^{\varepsilon}\right]_{x_3 = \delta(x_1, x_2)} = 0, \ \left[\left(\mu \nabla \vec{v}^{\varepsilon} - \delta \cdot p^{\varepsilon}\right) \cdot \vec{n}\right]_{x_3 = \delta(x_1, x_2)} = 0. \tag{6}$$

where $\vec{n}$ is the normal vector to boundary $x_3 = \delta(x_1, x_2)$.

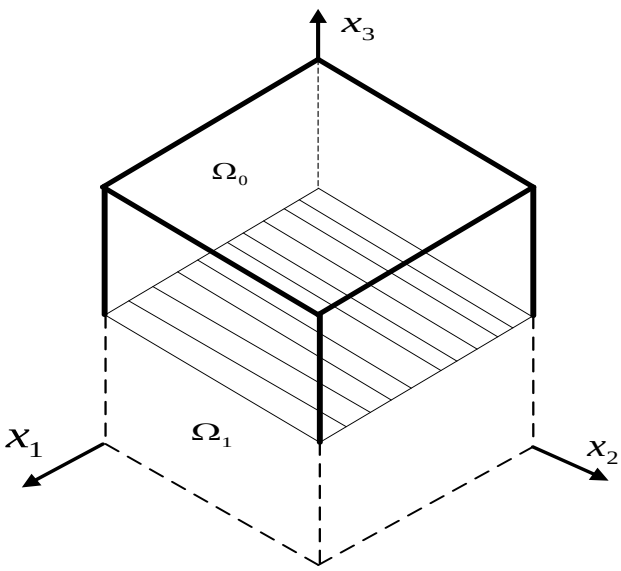

Figure 1. Problem determination domain

The following initial boundary conditions are set on the boundary of the domain Ω:

$$\vec{v}^{\varepsilon}\Big|_{t=0} = a^{\varepsilon}(x), \quad \vec{v}^{\varepsilon}\Big|_{S_T} = 0 \tag{7}$$

where $a^{\varepsilon}(x) = \begin{cases} a(x), \ x \in \Omega_0 \\ 0, \ x \in \Omega_1 \end{cases}$

Study of the problem. For further investigation of the problem (4)-(7), we use the spaces $L_m(\Omega), L_m(Q_T), L_{q,r}(Q_T)$, and we denote the scalar product and the corresponding norms:

$$(u,\vartheta)=\int_\Omega u_{x_i}\cdot\vartheta_{x_i}dx=\int_\Omega u_i\vartheta_i dx,\quad \|u\|_{m,\Omega}=\left(\int_\Omega |u|^m dx\right)^{1/m},$$

$$\|u\|_{m,Q_T}=\left[\int_0^T\left(\int_\Omega |u|^m dx\right)dt\right]^{1/m}\quad \|u\|_{q,r,Q_T}=\left[\int_0^T\left(\int_\Omega |u|^q dx\right)^{r/q}dt\right]^{1/r}$$

where $Q_T=\Omega\times(0,T)$.

By $M(Q_T)$ let us denote the following set of the function:

$$M(Q_T)=\left\{\vec{v}\in C^\infty(Q_T), div\vec{v}=0,\ \vec{v}\big|_{S_T}=0\right\}$$

where $C^\infty(Q_T)$ is the set of infinite differentiable functions in the domain Q_T. Closures of a set $M(Q_T)$ in norm $L_2(Q_T), W_2^1(Q_T), W_2^2(Q_T)$ accordingly we denote as $V_0(Q_T), V_1(Q_T), V_2(Q_T)$.

Multiplying equation (4) scalar by $\vec{v}^\varepsilon$ to Q_T we get the energy balance equation:

$$\int_0^t\left(\int_\Omega v^\varepsilon\cdot\frac{dv^\varepsilon}{dt}dx\right)dt+\int_0^t\left(\int_\Omega \vec{v}^\varepsilon\cdot\nabla p^\varepsilon dx\right)dt-\mu\int_0^t\left(\int_\Omega \Delta\vec{v}^\varepsilon\cdot\vec{v}^\varepsilon dx\right)dt+$$
$$\int_0^t\left(\int_\Omega \frac{\xi(x)}{\varepsilon}\cdot\left(\vec{v}^\varepsilon\right)^2 dx\right)dt-\int_0^t\left(\int_\Omega f\cdot\vec{v}^\varepsilon dx\right)dt=0, \tag{8}$$

With the help of boundary conditions and integration in parts, we have:

$$\frac{1}{2}\int_0^t\frac{d}{dt}\int_\Omega\left(v^\varepsilon\right)^2 dxdt-\int_0^t\left(\int_\Omega p^\varepsilon\cdot div\vec{v}^\varepsilon dx\right)dt+$$
$$+\mu\int_0^t\left\|v_x^\varepsilon\right\|^2 dt+\int_0^t\left(\int_\Omega\left(\sqrt{\frac{\xi(x)}{\varepsilon}}\vec{v}^\varepsilon\right)dx\right)dt-\int_0^t\left(\int_\Omega f\cdot\vec{v}^\varepsilon dx\right)dt=0 \tag{9}$$

Then taking into account $div\vec{v}^\varepsilon=0$, we get

$$\frac{1}{2}\left(\left\|\vec{v}^\varepsilon\right\|_{t=T}^2-\left\|\vec{v}^\varepsilon\right\|_{t=0}^2\right)+\mu\int_0^T\left\|\vec{v}_x^\varepsilon\right\|^2 dt+$$
$$+\int_0^T\left(\int_\Omega\left(\sqrt{\frac{\xi(x)}{\varepsilon}}\vec{v}^\varepsilon\right)^2 dx\right)dt-\int_0^T\left(\int_\Omega f^\varepsilon\cdot\vec{v}^\varepsilon dx\right)dt=0 \tag{10}$$

Using the Hölder's inequality and the initial condition we have

$$\left\|\vec{v}^\varepsilon(x,T)\right\|^2+2\mu\left\|\vec{v}_x^\varepsilon\right\|_{2,Q_T}^2+\frac{2\cdot\xi(x)}{\sqrt{\varepsilon}}\left\|\vec{v}^\varepsilon\right\|_{2,Q_T}^2\le\left\|a^\varepsilon(x)\right\|^2+2\cdot\left\|f^\varepsilon\right\|_{2,Q_T}\cdot\left\|\vec{v}^\varepsilon\right\|_{2,Q_T} \tag{11}$$

To obtain a further estimate, an additional solution estimation inequality is needed. Let us multiply (4) in scalar by $\vec{v}^\varepsilon$ to $L_2(\Omega)$ so we get

$$\frac{1}{2}\frac{d}{dt}\left\|v^\varepsilon\right\|^2+\mu\left\|v_x^\varepsilon\right\|^2=(f^\varepsilon,\ v^\varepsilon) \tag{12}$$

From equation (12) by virtue of positivity $\mu\left\|v_x^\varepsilon\right\|^2$, we have

$$\left\|v^\varepsilon\right\|\frac{d\left\|v^\varepsilon\right\|}{dt}\le\left\|f^\varepsilon\right\|\cdot\left\|v^\varepsilon\right\| \tag{13}$$

this inequality holds if $\left\|V^\varepsilon(x,t)\right\|=0$ or

$$\frac{d}{dt}\left\|v^\varepsilon(x,t)\right\|\le\left\|f^\varepsilon(x,t)\right\| \tag{14}$$

Since the continuous function $\left\|v(x,t)\right\|$ of the argument t, integrating (14) by we have:

$$\left\|v^\varepsilon(x,t)\right\|\le\left\|v^\varepsilon(x,0)\right\|+\int_0^t\left\|f(x,t)\right\|dt \tag{15}$$

or

$$\left\|v^\varepsilon(x,t)\right\|\le\left\|a^\varepsilon(x)\right\|+\int_0^t\left\|f^\varepsilon(x,t)\right\|dt \tag{16}$$

From (13) and (16), we get

$$\left\|\vec{v}^\varepsilon(x,T)\right\|^2+2\mu\left\|\vec{v}_x^\varepsilon\right\|_{2,Q_T}^2+\frac{2\cdot\xi(x)}{\varepsilon}\cdot\left\|\vec{v}^\varepsilon\right\|_{2,Q_T}^2\le\left\|a^\varepsilon(x)\right\|^2+2\left(\left\|a^\varepsilon(x)\right\|+\int_0^T\left\|f^\varepsilon\right\|dt\right)\cdot\left\|f^\varepsilon\right\|_{2,Q_T} \tag{17}$$

Definition. The generalized solution of the problem (4)-(7) is a function $v^\varepsilon(x,t)\in V_2(Q_T)\cap L_{q,r}(Q_T)$ that satisfies the integral identity

$$\int_{Q_T}\left[-v^\varepsilon\cdot\phi_t+\mu v_x^\varepsilon\cdot\phi_x-\vartheta_i^\varepsilon\cdot v^\varepsilon\cdot\phi_{x_i}\right]dxdt+\frac{1}{\varepsilon}\int_{Q_t}\xi(x)\cdot v^\varepsilon\phi dxdt+\int_\Omega v^\varepsilon\phi\Big|_{t=t}dx-\int_\Omega a\phi\Big|_{t=0}dx=\int_{Q_t}f\phi dxdt \tag{18}$$

for $\forall\phi\in\overset{\circ}{W}{}_2^{1,1}(Q_T)$

Theorem 1. Let $v^\varepsilon(x,t)\in V_2(Q_T)\cap L_{q,r}(Q_T)$, $f(x,t)\in V_2(Q_T)\cap L_{q,r}(Q_T)$. Then there is a unique generalized solution to problem (4)-(7) and an estimate for the solution exists (17).

Proof. Omitting the parameter ε assuming that there are two solutions v' and v'' for their difference $u=v'-v''$ from the identity (18) we get

$$\int_{Q_T}\left[-u\cdot\phi_t+\mu u_x\cdot\phi_x-(\vartheta_i'u+u_iv'')\phi_{x_i}\right]dxdt+\frac{1}{\varepsilon}\int_{Q_t}\xi(x)u\phi dxdt+\int_\Omega u\phi\Big|_{t=t}dx=0 \tag{19}$$

Reasoning similarly as in [17] $\vec{u}$ can be considered as the generalized solution from the $L_2(Q_T)$ problem

$$u_t-\mu\Delta u=-gradq-\frac{\xi(x)}{\varepsilon}u-\frac{\partial\vec{f}^i}{\partial x_i} \tag{20}$$

$$divu=0,\ u\Big|_{S_T}=0,\ u\Big|_{t=0}=0,$$

where $\vec{f}^k\equiv\vartheta_i'\vec{u}+u_i\cdot\vec{v}''$, $i=1,2,3.$ are considered as free terms.

In [17], the uniqueness theorem for $\vec{u}(x,t)\in V_2(Q_T)\cap L_{q,r}(Q_T)$ is proved with q and r satisfying the conditions

$$\frac{1}{r}+\frac{n}{2q}\le\frac{1}{2},\ r\in[2,\infty),\ q\in(n,\infty] \tag{21}$$

or

$$q>n,\ r=\infty \tag{22}$$

After scalar multiplication (20), we have

$$\frac{1}{2}\|u(x,t)\|^2+\mu\int_0^t\|u_x\|^2dt+\frac{1}{\varepsilon}\int_0^t\int_\Omega\xi(x)u^2(x)dxdt=\int_{Q_t}f^k u_{x_i}dxdt=\int_{Q_t}u_i\vec{v}''u_{x_i}dxdt \tag{23}$$

the right part od which is

$$\int_{Q_t}\vec{f}^k\vec{u}_{x_i}dxdt=\int_{Q_t}u_i\vec{v}''\vec{u}_{x_i}dxdt \tag{24}$$

in the class of functions satisfying conditions (21) and (22), it is estimated using the Hölder's inequality in a special way [17].

$$\left|\int_{Q_t}u_i\cdot\vec{v}''\vec{u}_{x_i}dxdt\right|\le\left(\int_{Q_t}\vec{u}_x^2dxdt\right)^{1/2}\cdot\left(\int_{Q_t}\vec{v}''^2\cdot\vec{u}^2dxdt\right)^{1/2}\le\|\vec{u}_x\|_{2,Q_t}\cdot\left[\int_0^t\left(\int_\Omega|\vec{v}''|^{2\cdot\frac{q}{2}}dx\right)^{2/q}\cdot\left(\int_\Omega|u|^{2\cdot\frac{q}{q-2}}dx\right)^{\frac{q-2}{q}}dt\right]^{1/2}\le$$

$$\le\|\vec{u}_x\|_{2,Q_t}\left[\int_0^t\left(\int_\Omega|\vec{v}''|^q dx\right)^{\frac{2}{q}\cdot\frac{r}{2}}dt\right]^{1/r}\cdot\left[\int_0^t\left(\int_\Omega|u|^{\frac{2q}{q-2}}dx\right)^{\frac{q-2}{2q}\cdot\frac{2r}{r-2}}dt\right]^{\frac{r-2}{r}}=\|\vec{u}_x\|_{2,Q_t}\cdot\|\vec{v}''\|_{q,r,Q_t}\cdot\|\vec{u}\|_{\frac{2q}{q-2},\frac{2r}{r-2},Q_t} \tag{25}$$

Then using the inequality

$$\|\vec{u}_x\|_{2,Q_t}\cdot\|\vec{u}\|_{\bar{q},\bar{r},Q_t}\le 0{,}5\beta\cdot\left(\sup_t\|\vec{u}(x,t)\|_{2,\Omega}+\|\vec{u}_x\|_{2,Q_t}\right)^2=\frac{\beta}{2}\left|u\right|^2_{Q_t},$$

where $\bar{q}=\frac{2q}{q-2},\bar{r}=\frac{2r}{r-2},\left|\vec{u}\right|=\sup_t\|\vec{u}(x,t)\|+\|\vec{u}_x\|_{2,Q_t}$.

from (25) we get

$$\left|\vec{u}\right|_{Q_t}\le\left(1+(2\mu)^{-1/2}+(\varepsilon/2)^{1/2}\right)\beta^{1/2}\|\vec{v}''\|^{1/2}_{q,r,Q_t}\left|\vec{u}\right|_{Q_t} \tag{26}$$

from which it follows that $\vec{u}\equiv 0$ for t satisfying the requirement

$$\left(1+(2\mu)^{-1/2}+(\varepsilon/2)^{1/2}\right)\beta^{1/2}\|\vec{v}''\|^{1/2}_{q,r,Q_t}<1.$$

The theorem is proved.

Numerical calculations. To perform a methodical calculation, let us consider a numerical solution of the auxiliary problem (4)-(5) with the following initial and boundary conditions:

$\tau=0$, $u|_{x=0}=u^0, v=0$. $x=0$, $u=u^0, v=0$. $x=X$, $\frac{\partial u}{\partial x}=0, v=0$. $y=0=Y$, $u=0, v=0$

As the domain under consideration, let us take a channel with an obstacle and with solid boundaries (Figure 2). Domain Ω_1 is the fictitious domain, Ω is the physical domain.

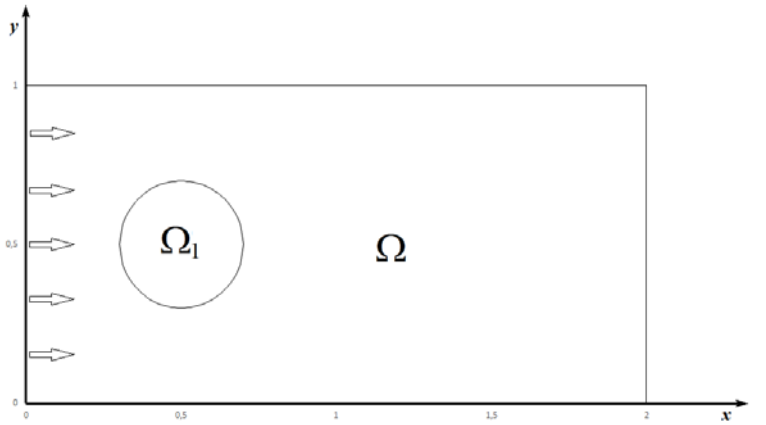

Figure 2. Schematic representation of the domain under consideration

For the numerical implementation of the auxiliary problem (4)-(5) let us the finite difference method and the splitting by physical parameters scheme [18]. The solution domain is covered by the so-called MAC-grid [19], in which the pressure determination nodes are located inside a rectangular grid cell, and the velocity component determination nodes are located on its faces. When approximating convective terms, a sign-sensitive scheme is used. This provides an approximation with second-order accuracy in space and first-order accuracy in time.

Let us assume that at some time $t^n = n\tau$ (τ is time step, n is number of steps) the velocity field is known as $\vec{v}^{\,n}$. Then the scheme for determining unknown functions at a time $t^{n+1} = (n+1)\tau$ can be represented as a three-stage splitting scheme:

I-stage

$$\frac{\vec{v}^{\,n+1/2} - \vec{v}^{\,n}}{\tau} = -\left(\vec{v}^{\,n}\nabla\right)\vec{v}^{\,n+1/2} - \nabla p^n + \mu^{\varepsilon}\Delta\vec{v}^{\,n+1/2} - \frac{\xi(x)}{\varepsilon}\vec{v}^{\,n+1/2} \tag{27}$$

II-stage

$$\Delta p^{n+1} - \Delta p^n = \frac{\nabla\vec{v}^{\,n+1/2}}{\tau} \tag{28}$$

III-stage

$$\frac{\vec{v}^{\,n+1} - \vec{v}^{\,n+1/2}}{\tau} = -\nabla p^{n+1} + \nabla p^n \tag{29}$$

where $\xi(x) = \begin{cases} 0, & (x,y) \in \Omega \\ 1, & (x,y) \in \Omega_1 \end{cases}$ $f_{\vec{u}} = \begin{cases} f(\vec{x},t), & (x,y) \in \Omega \\ 0, & (x,y) \in \Omega_1 \end{cases}$

In the numerical implementation, the values and zero values of the tangent component of the fluid flow velocity at the inlet and outlet to the computational domain were set. At the “solid: boundaries, the pressure values are given as linear functions and the tangent component of the velocity is zero.

The following physical interpretation of the given splitting scheme is proposed. At the first stage, it is assumed that the transfer of the amount of motion (momentum of a unit of mass) is carried out only by convention and diffusion. The velocity field obtained in this way does not satisfy the incompressibility condition. In this paper, in contrast to the classical version of the method of splitting by physical parameters [18], an implicit scheme is used at the first stage in the form of (27). This approach was substantiated and numerically implemented in [20]. Iterative schemes for solving auxiliary grid Navier-Stokes equations have been proposed. This approach improves the conditionality number of the matrix of a system of linear equations and accelerates the convergence of the solution.

At the second stage, the pressure field is found according to the intermediate velocity field, considering the condition of solenoidality of the velocity vector from the solution of the Poisson equation. At the second stage, numerical methods for solving grid elliptic equations with Dirichlet boundary conditions for pressure are used.

At stage III, it is assumed that the transfer is carried out only due to the pressure gradient (convection and diffusion do not occure).

In this case, tracking the actual boundary of the source area is necessary to set the coefficients of the auxiliary problem. To ensure a smooth change in the viscosity coefficient of the auxiliary problem, bicubic spline interpolation of two-dimensional function is used. This function, interpolated in a small neighborhood of the boundary region, provides a smooth change that will increase computational accuracy and reliability. A 50x20 grid and the following dimensionless parameter values are used in the numerical implementation: $0 < x_i < 2, 0 < y_i < 1,\ \tau = 0.001,\ \mu = 1/\mathrm{Re} = 0.001,\ \varepsilon = 10^{-5}$.

The upper and lower solid boundary curves are described by the equations

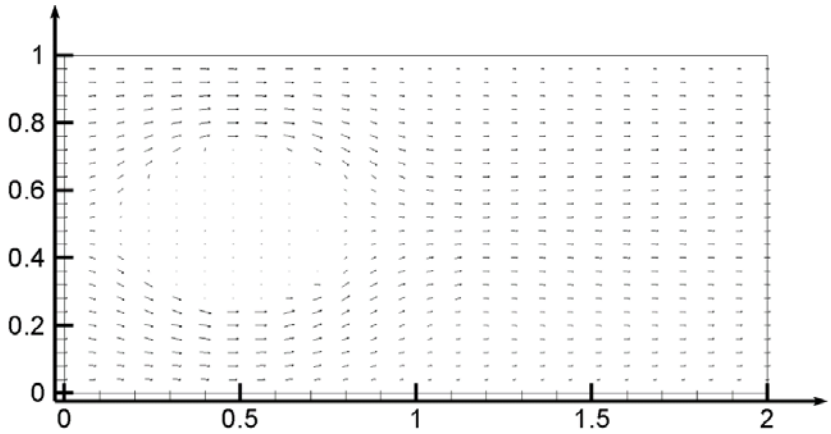

Figure 3. Velocity vector fields

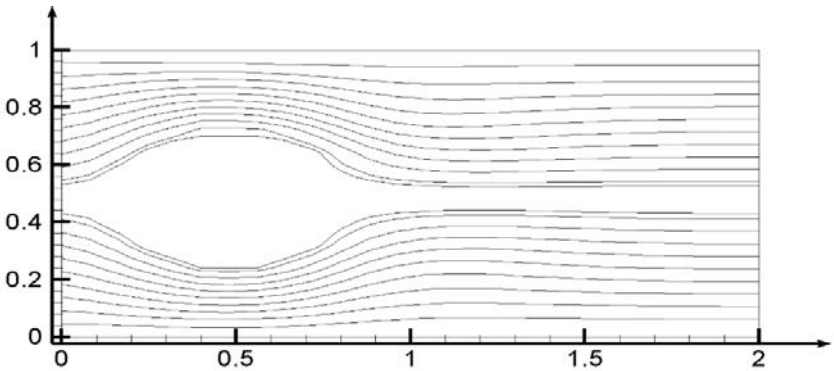

Figure 4. Isolines of the stream function

Conclusion. The fictitious domain method for the Navier-Stokes equations is studied and mathematically justified in the work. The theorem of unambiguous solvability of the initial boundary value problem and the existence and uniqueness of the generalized solution of the auxiliary problem for the Navier-Stokes equations in the case of two spatial variables are proved. A numerical implementation of the proposed method of fictitious domain with continuation by the lowest coefficients for the Navier-Stokes equations is carried out. Various graphical illustrations of the results of numerical simulation using the fictitious domain method for the Navier-Stokes equations are presented.

The isolines of the stream function reveal the current flowing around smooth bodies. The boundary layer of the flow that is directly adjacent to the streamlined body is slowing down harder than the layers that are distanced from the boundary. This leads to tangential friction reduction down to zero on the streamlined surface, then separation of the flow from the surface and a return flow behind the separation line occurrence (Figure 3-4).

The research is funded by the Science Committee of the Ministry of Education and Science of the Republic of Kazakhstan (Grant No. AP09058430).

А.Н. Темирбеков[1], Е.А. Малғаждаров[2], А.М. Тлеулесова[1], Л.Н. Темирбекова[3]
[1]Әл-Фараби атындағы Қазақ ұлттық университеті Алматы, Қазақстан,
[2]С.Аманжолов атындағы Шығыс Қазақстан университеті, Өскемен, Қазақстан
[3]Абай атындағы Қазақ ұлттық педагогикалық университеті, Алматы, Қазақстан
E-mail: temirbekov@kaznu.kz

Аңдатпа. Бұл жұмыс Навье-Стокс теңдеулеріне арналған жалған аймақтар әдісін зерттеуге және математикалық негіздеуге арналған. Жұмыста Навье-Стокс теңдеулері үшін кіші коэффициенттерді жалғастыра отырып, жалған аймақтардың әдісі негізделген. Екі кеңістіктік айнымалылар жағдайында Навье-Стокс теңдеулері үшін көмекші мәселенің жалпыланған шешімінің болуы мен бірегейлігі бастапқы шекаралық мәселенің біржақты шешілуінің теоремасы дәлелденді. Навье-Стокс теңдеулері үшін кіші коэффициенттер бойынша жалғастықпен жалған облыстардың ұсынылған әдісін сандық іске асыру жүргізілді. Навье-Стокс теңдеулері үшін жалған аймақтар әдісін қолдану кезінде сандық модельдеу нәтижелерінің әртүрлі графикалық суреттері ұсынылған.

Түйін сөздер: Жалған аймақ әдісі, Навье-Стокс теңдеуі, бастапқы шекті мәселенің шешілуі, жалпыланған шешімнің бар болуы және жалғыздығы, сандық есептеулер.

А.Н. Темирбеков[1], Е.А. Малғаждаров[2], А.М. Тлеулесова[1], Л.Н. Темирбекова[3]
[1]Казахский национальный университет имени аль-Фараби, Алматы, Казахстан,
[2]Восточно-Казахстанский университет им. С.Аманжолова, Усть-Каменогорск, Казахстан
[3]Казахский национальный педагогический университет имени Абая, Алматы, Казахстан,
E-mail: temirbekov@kaznu.kz

Аннотация. Данная работа посвящена изучению и математическому обоснованию метода фиктивных областей для уравнений Навье-Стокса. В работе обоснован метод фиктивных областей с продолжением по младшим коэффициентам для уравнений Навье-Стокса. Доказана теорема однозначной разрешимости начально-краевой задачи и существования и единственности обобщенного решения вспомогательной задачи для уравнений Навье-Стокса в случае двух пространственных переменных. Проведена численная реализация предлагаемого метода фиктивных областей с продолжением по младшим коэффициентам для уравнений Навье-Стокса. Представлены различные графические иллюстрации результатов численного моделирования при применении метода фиктивных областей для уравнений Навье-Стокса.

Ключевые слова: метод фиктивных областей, уравнение Навье-Стокса, разрешимость начально-краевой задачи, существование и единственность обобщенного решения, численные расчеты.

Information about authors:

Temirbekov Almas, PhD, acting associate Professor of Department of Computer Science, Al-Farabi Kazakh National University; temirbekov@kaznu.kz, https://orcid.org/0000-0002-4157-2799

Malgazhdarov Yerzhan, candidate phys.-math. science, acting associate Professor of Department of Mathematics, Sarsen Amanzholov East Kazakhstan State University; malgazhdarov_e@mail.ru, https://orcid.org/0000-0003-4218-3469

Tleulessova Aigerim, PhD, acting associate Professor of Department of Mathematics, Al-Farabi Kazakh National University; aigerimtleulessova@gmail.com, https://orcid.org/0000-0001-9280-1048;

Temirbekova Laura, PhD, acting associate Professor of Department of Informatics and Informatization, Abai Kazakh National Pedagogical University; laura-nurlan@mail.ru, https://orcid.org/0000-0003-2456-9974

REFERENCES

[1] Saulyev V.K. On a method for automating the solution of boundary value problems on high-speed computing machines // DAN SSSR. -1962. - Vol. 142, No.3. - p. 497-500 (in Russ.).

[2] Saulyev V.K. On the solution of some boundary value problems on high-speed computing machines by the method of fictitious domains. Siberian mathematical journal. -1963. - Vol. 4, No.4. - p. 912-926 (in Russ.).

[3] Rikvind V.Ya. On estimates of the convergence rate of solutions of difference equations to solutions of elliptic equations with discontinuous coefficients and on a numerical method for solving the Dirichlet problem// DAN SSSR, - 1963. - Vol. 49 (in Russ.).

[4] Smagulov Sh.S., Orunkhanov M.K. Approximate method for solving the hydrodynamic equations in multiply connected domains, Dokl.-1981.-T. 260, No.5. -p.1078-1082 (in Russ.).

[5] Orunkhanov M.K. Smagulov Sh.S. The method of fictitious domains for the Navier-Stokes equations in terms of stream function and velocity of the vortex with inhomogeneous boundary conditions //Computational technologies.Novosibirsk: SB RAS, 2000, vol. 5, no. 3, p. 46-53 (in Russ.).

[6] Smagulov Sh.S., Temirbekov N.M., Kamaubaev K.S. Modeling by the method of fictitious regions of the boundary condition for pressure in fluid flow problems // Siberian Journal of Computational Mathematics. - Novosibirsk: SB RAS, 2000. - Vol.3, No.1. – p. 57-71. (in Russ.)

[7] Smagulov Sh.S., Otelbaev M.O. On a new method of approximate solutions of nonlinear equations in an arbitrary domain // Computational Technology, 2001, Vol. 6, No.6, p. 93-107(in Russ.)

[8] Baldybek Zh. The method of augmented domains for the nonlinear boundary value problem of the ocean // Mathematical Journal. - 2002. - Volume 2, No. 2. - p. 41-50(in Russ.).

[9] Zhaksylykova Z., Temirbekov N., Malgazhdarov Y. The fictitious domain method for the Navier-Stokes equations in natural variables. AIP Conference Proceedings Volume 2325, Article number 020041.-2021.

[10] Zhaksylykova Z., Temirbekov N., Malgazhdarov Y., Zhumagulov B. The method of fictitious domains for solving the problems of the dynamics of a viscous incompressible fluid. Proceedings of the 7th international conference on control and optimization with industrial applications, Vol 2. p. 377-379.-2020.

[11] Temirbekov A. N., Danaev N. T. The method of fictitious regions for the model of the atmospheric boundary layer. Bulletin of KazNU, Mathematics, Mechanics, computer science series, -2014.-№ 2(81).-p. 98-107.

[12]Temirbekov A., Baigereyev D., Temirbekov N., Urmashev B., Amantayeva A. Parallel CUDA implementation of a numerical algorithm for solving the Navier-Stokes equations using the pressure uniqueness condition. AIP Conference Proceedings Volume 2325, Article number 020063. -2021.

[13] Temirbekov A.N., Waldemar Wójcik. Numerical Implementation of the Fictitious Domain Method for Elliptic Equations// International Journal of Electronics and Telecommunications.-2014.- Vol.60, № 3.-P. 219-223.

[14] Temirbekov A.N. Numerical implementation of the method of fictitious domains for elliptic equations. AIP Conference Proceedings. Volume 1759, Article number 020053. – 2016.

[15] Glowinski R., Pan T-W., Periaux J. A fictitious domain method for Dirichlet problem and applications. Computer Methods in Applied Mechanics and Enginering.-1994.-Vol.111, №3-4.-P.283-303.

[16] Glowinski R., Pan T-W., Kearsley A. J., Periaux J. Numerical simulation and optimal shape for viscous flow by a fictitious domain method. International Journal for Numerical Methods in Fluids.-1995.-Vol.20, №8-9.-P.695-711.

[17] Ladyzhenskaya O. A. Matematicheskie voprosy dinamiki vyazkoi nezhimaemoy zhidki [Mathematical questions of the dynamics of a viscous incompressible liquid]. - M.: Nauka, 1970(in Russ.).

[18] Belotserkovsky O.M., Gushchin V.A., Schennikov V.V. Method of splitting in the application to solving problems of the dynamics of a viscous incompressible liquid. math. and math. phys. - 1975. - Vol. 15, No. 1. - p. 197-207(in Russ.).

[19] Roach P. Computational fluid dynamics. M.: Mir. 1980. 616 p(in Russ.).

[20] Khazimov K.M., Bora G.S., Urmashev B.A., Khazimov M.Z., Khazimov Z.M Calculation of optimal design and technical parameters of a solar dryer// International Journal of Engineering and Innovation Technologies (IJEIT), Volume 4, Issue 1, July 2014, p. 251-261(in Russ.).

Publication Ethics and Publication Malpractice in the journals of the National Academy of Sciences of the Republic of Kazakhstan

For information on Ethics in publishing and Ethical guidelines for journal publication see **http://www.elsevier.com/publishingethics** and **http://www.elsevier.com/journal-authors/ethics**.

Submission of an article to the National Academy of Sciences of the Republic of Kazakhstan implies that the described work has not been published previously (except in the form of an abstract or as part of a published lecture or academic thesis or as an electronic preprint, see **http://www.elsevier.com/postingpolicy**), that it is not under consideration for publication elsewhere, that its publication is approved by all authors and tacitly or explicitly by the responsible authorities where the work was carried out, and that, if accepted, it will not be published elsewhere in the same form, in English or in any other language, including electronically without the written consent of the copyright-holder. In particular, translations into English of papers already published in another language are not accepted.

No other forms of scientific misconduct are allowed, such as plagiarism, falsification, fraudulent data, incorrect interpretation of other works, incorrect citations, etc. The National Academy of Sciences of the Republic of Kazakhstan follows the Code of Conduct of the Committee on Publication Ethics (COPE), and follows the COPE Flowcharts for Resolving Cases of Suspected Misconduct (**http://publicationethics.org/files/u2/New_Code.pdf**). To verify originality, your article may be checked by the Cross Check originality detection service **http://www.elsevier.com/editors/plagdetect**.

The authors are obliged to participate in peer review process and be ready to provide corrections, clarifications, retractions and apologies when needed. All authors of a paper should have significantly contributed to the research.

The reviewers should provide objective judgments and should point out relevant published works which are not yet cited. Reviewed articles should be treated confidentially. The reviewers will be chosen in such a way that there is no conflict of interests with respect to the research, the authors and/or the research funders.

The editors have complete responsibility and authority to reject or accept a paper, and they will only accept a paper when reasonably certain. They will preserve anonymity of reviewers and promote publication of corrections, clarifications, retractions and apologies when needed. The acceptance of a paper automatically implies the copyright transfer to the National Academy of Sciences of the Republic of Kazakhstan.

The Editorial Board of the National Academy of Sciences of the Republic of Kazakhstan will monitor and safeguard publishing ethics.

(Правила оформления статьи для публикации в журнале смотреть на сайтах:

www:nauka-nanrk.kz

http://physics-mathematics.kz/index.php/en/archive

ISSN 2518-1726 (Online), ISSN 1991-346X (Print)

Редакторы: *М.С. Ахметова, Р.Ж. Мрзабаева, Д.С. Аленов*
Верстка на компьютере *В.С. Зикирбаева*

Подписано в печать 12.06.2021.
Формат 60x881/8. Бумага офсетная. Печать – ризограф.
11 п.л. Тираж 300. Заказ 3.

Национальная академия наук РК
050010, Алматы, ул. Шевченко, 28, т. 272-13-18, 272-13-19